WILLOWFIELD PL 5 LOT 3 DPS 43443 BP 27817

AS LAID.

OFFICE OF THE CHIEF BUILDING SUPERVISOR
PRIVATE BAG, HAMILTON, N.Z.
PHONE 386-699

HAMILTON CITY

APPLICATION FOR PERMIT FOR SANITARY, PLUMBING AND DRAINGAGE WORK

I, the undersigned (name in full) TEE DRAINAGE. address P.O. BOX 5455 FRANKTON.

Hereby make application for permission to carry out the work prescribed herein, as set out in the plans attached hereto, at the premises situated in:-

5 WILLOWFIELD ~~Street~~/Road, being Lot 3 D.P.S. ~~7933~~ 43443

Name and Address of owner of premises: Cresswell + Parker

Nature of Work SANITARY DRAINAGE + STORMWATER

Value of proposed work excluding materials $ ¢

(a) Plumbing

(b) Drainage (including stormwater)

..... Regd. No. ..... Licensed Plumber

08007 Regd. No. [signature] Licensed Drainlayer

Dated this ..... day of ..... 19.....

Building Permit 27817 Drainage Permit 029326 Plumbing Permit .....

Plumbing & Drainage Costs ..... Plumbing & Drainage Fees .....

Details of drainage and boundaries required overleaf.

STREET 5 Willowfield P/C

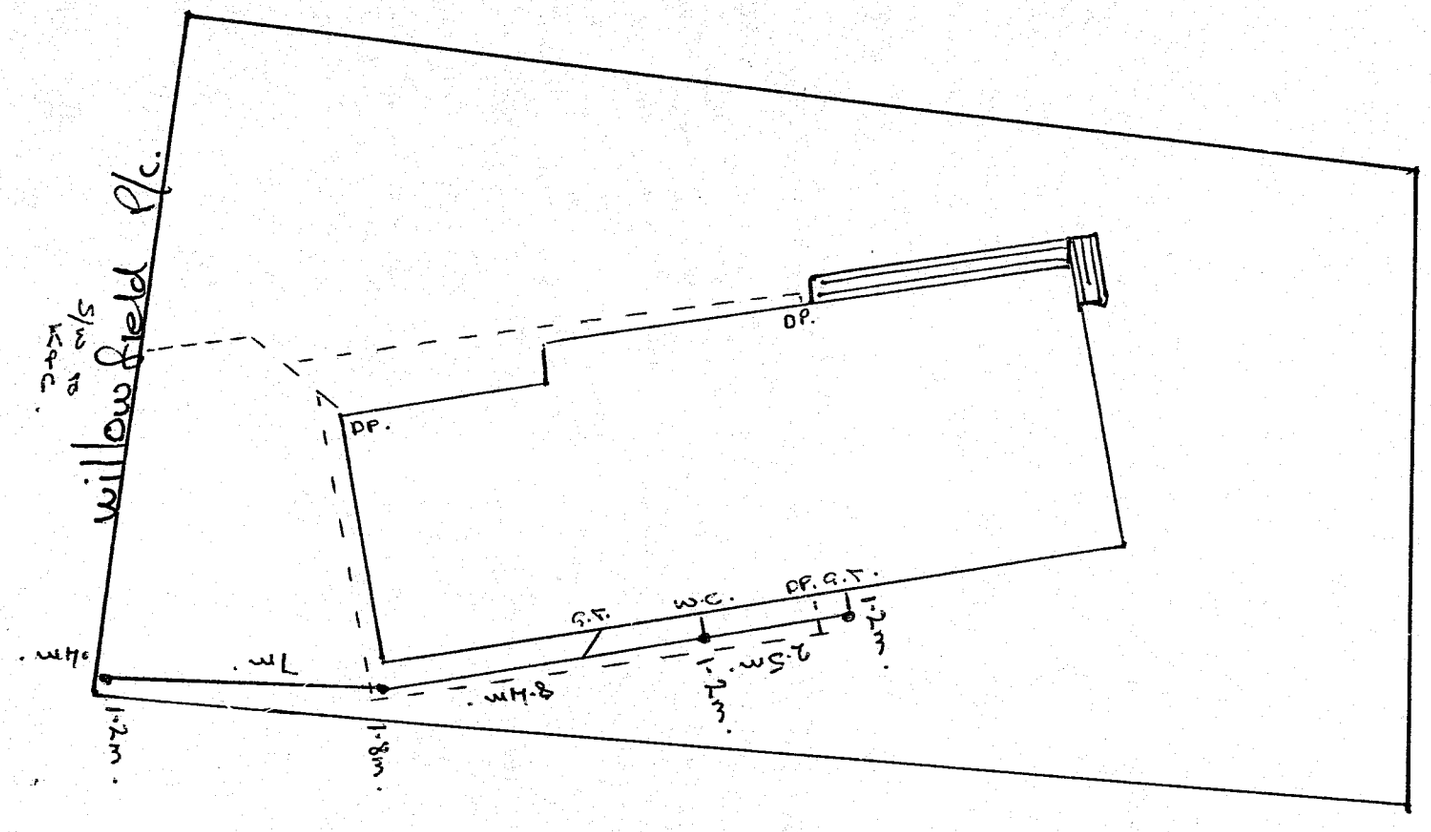

Date of Inspection 7.4.88

Drainlayer's Signature G Hogg

as laid

WILLOWFIELD 5 L 3 DPS 43443 BP 27817

BUILDING CONTROL DIVISION

PROGRESS CARD

495571

ADDRESS 5. Willowfeild OWNER: M. Cresswell/Parker BUILDER: Jennian Homes

BUILDING PERMIT No. 27817	Lot	DPS	Value	Nature
Date Issued: 22/2/88	3	43443	82000	Dwelling.

Withheld Notice -3 FEB 1988 Issue Notice: 16 FEB 1988

TO STRUCTURAL	FROM:		TYPIST
TO HFS	FROM:		15 FEB 1988 ~~2 FEB 1988~~

Date Received RECEIVED 28 JAN 1988 BLDG. DIV.

AMENDED PLANS

DATE	
Stat	P.
Pl &	D.
Building	
Design	

RECEIVING OFFICER COMMENTS

DRAINLAYER G. Ross

PLUMBER Ryan.

BUILDING

INSPECTIONS	SIGN	DATE	APP.	DATE
F'dation-Siting		23-2-88	X	
Concrete Floor		25-2-88	✓	
Bond Beam Reinf.				
Prelining		15-3-88		
Completion		12-5-88		

Requested Engineer inspect foundations low bearing soils over most of Section Rock-Veneer Extension 23-2-88

Engineer to inspect and Approve before pouring Footings 25-2-88

Floor Joists to be bolted to plate on Anchor plate details Sheet bearing Required to East and North Exterior Walls Extra Space. Bracing Required to Roof as discussed On site. 15-3-88

DRAINAGE PERMIT NO. 029826 DATE 24-3-88 24-9-88

Plumbing Permit No.

RECEIPT NO. 27817

NATURE OF WORK. New Dwelling

INSPECTIONS	SIGN	DATE	APP.	DATE
F'dation-Siting				
Concrete Floor				
Prelining				
Waste & Soil Pipe				
Foulwater		7.4.88	✓	
Stormwater				
Completion		22/11/88		

WILLOWFIELD PL 5 LOT 3 DPS 43443 BP 27817

27817

HAMILTON CITY COUNCIL

APPLICATION FOR A BUILDING PERMIT

Office of the Chief Building Inspector
Private Bag
Garden Place, Hamilton, N.Z.
Phone: 386-677

RECEIVED
28 JAN 1988
BLDG. DIV.

To erect/alter/demolish/install a Private Dwelling

APPLICANT TO COMPLETE — PLEASE PRINT IN INK

Address of Project 5 Willowfield
Lot No. 3 DPS 43443 Area 665m²
Val. No. Ward
Name of Owner M. Wessell & L. Parker
Address C/o Jennian Homes Ltd
Signature P/P
Area of ground floor 124.43
Area of other floors – 37.2
Total floor areas 1
Total number of floors 1
Floor area of other buildings –
Soil Type (eg. clay, peat etc.) Clay

Proposed use Private Dwelling
Name of Builder Jennian Homes Ltd
Address Box 122, Hamilton
Signature T.G. Mutton
Contact Phone No. 485-571
Name of Engineer Wooley Consultants
Address Box 434, Hamilton
Name of Designer Jennian Homes

COSTS	$	¢
Building (Labour & materials)	80 000	–
Plumbing and Drainage (Labour Only)	2 000	–
Total Cost	82 000	–

OFFICE USE ONLY

Fees	$	¢
Building	247	–
Plumbing and Drainage	148	–
Crossing	537	–
Research Levy	82	–
Stormwater Levy		
Footpath Deposit MB	~~100~~	
Reserves Contribution		
Photocopying		
Total $ Inc. G.S.T.	1016	

TO STRUCTURAL	11 FEB 1988
TO HFS	
Engineers Supervision	
Design Cert	

ISSUE PERMIT	✓
DATE	15/2/88
Sign	

Date Permit	22/2/88
Permit No.	27817
Receipt No.	082484.

AMENDED PLAN
DATE 29 JAN 1988
STAT P. 11 FEB 1988
12 FEB 1988
P. & D.
BI
STREETS
DESIGN

27817

RAG:DA

DATE 12.2.88

MEMO TO CHIEF BUILDING INSPECTOR

JOB NO: 5418.

BUILDING PERMIT APPLICATION

5 Willowfield Str.

Lot 3 DPS 43443.

CRESSWELL & PARKER.

APPROVED: NB. 350 x 75 bear changed to 400 x 75 douglas fir in accordance with Engineers calcs.

pp. K. Morgan.

RA GREY
DESIGN ENGINEER - STRUCTURES

HAMILTON CITY COUNCIL

STATUTORY PLANNING
BUILDING AND HEALTH
DEPARTMENT

15 February 1988

DUTY INSPECTOR AVAILABLE - 9am - 12 noon.
PHONE: 38-6677

Municipal Offices
Garden Place
Private Bag
Hamilton, New Zealand
Phone (071) ~~XXXXX~~ 38-6677 BLDG. DIV

MR Jennian Homes Ltd.

Box 122

HAMILTON

TAX INVOICE

GST No 11-174-531
Tax Invoice only if accompanied by an official receipt.

Dear Sir/Madam,

re: Dwelling Lot No. 3 D.P.S. 43443

M. Wesswell & L. Parker Address 5 Willowfield

In reference to the above application I advise that this has now been approved, and upon receipt of the fees and charges itemised below, a Building Permit will be issued.

FEES ARE TO BE PAID TO CASHIERS PRIOR TO UPLIFTING BUILDING PERMIT FROM THE PERMIT AND LICENCE CENTRE.

Approved documents are to be on site at time of inspection.

Yours faithfully,

CHIEF BUILDING INSPECTOR.

Per: E.R. Fahey

Building Fee	HB 0202-99-922	$ 247.00
Plumbing & Drainage	HB 2202-99-932	$ 148.00
Crossing	ZR 0149-99-922	$ 537.00
Research Levy	AT 3202-00-924	$ 82.00
Stormwater Levy	YP 0202-99-987	$
Footpath Deposit	AT 3702-00-813	$
Reserves Contribution	AR 3620-00-988	$
Photocopying	HB 0202-99-995	$
Signs & Hoardings	HB 0202-99-962	$
Total Incl. G.S.T.		$ 1016.00

CONDITIONS:

1. Foundation inspection to be called for.
2. Pre-lining inspection to be called for.
3. Boundary pegs to be shown at footing inspection.
4. Exposed timber to be treated to T.P.A. H3.
5. Vapour barrier required to skillior roofs under insulation
6. Boundary measurements to be taken from the fascia.
7. Pre-concrete floor inspection required.
8. Verandah posts to Fig. 48, NZS 3604.
9. Brick panels to be no less than 400mm in width.
10. Provide adequate sub floor ventilation.
11. NB.350 x 75 beam changed to 400 x 75 Douglas Fir in accordance with Engineer's calcs.
12. ATT drainage and plumbing to comply with Drainage & Plumbing Regulations 1978 and H.C.C. Bylaws.
13. Stormwater to street channel by Licensed Drainlayer and drainage permit uplifted.

HAMILTON CITY COUNCIL

STATUTORY PLANNING BUILDING AND HEALTH DEPARTMENT

2 February 1988

DUTY INSPECTOR AVAILABLE - 9am-12 Noon.
PHONE 38-6677

Municipal Offices
Garden Place
Private Bag
Hamilton, New Zealand
Phone (071)XXXXXX 38-6677 BLDG. DIV

Please ask for:

Your ref:

Our ref:

MR Jennian Homes Ltd.

Box 122,

HAMILTON

Dear Sir/Madam,

Re: Dwelling Lot No. 3 D.P.S. 43443

M. Cresswell & L. Parker Address 5 Willowfield

'PERMIT WITHHELD'

In reference to the above application, before any further processing can be carried out, please supply the following information in duplicate:

Design certificate and (calculations required for beams.)
NO. yes.

Yours faithfully,

CHIEF BUILDING INSPECTOR

Per: E D Kabing

BUILDING PERMIT ACTION SHEET

ADDRESS 5 Willowfeild OWNER M. CRESSWELL / L. PARKER

LOT 3 D.P.S. 43443 USE PROPOSED Dwelling

T.P.O. FILE ..... T.C. FILE ..... LOG SHEET K16/L16

Health		A.B. 29/1/88
Streets	Crossing required — Yes / ~~No~~ If yes, is street kerbed — Yes / No Size required 5 metres Is street correctly formed at boundary — Yes / No Distance — Kerb to Property Boundary 3.350 metres Kerb ☐ Vertical Type ☐ Mountable Footpath Type ☑ Concrete ☐ Seal ☐ Metal ☐ Other	Concrete Drive 3.2
Town Planning	Zoning Residential 1	29/1/88
Water Supply		29/1/88
Plumbing and Drainage	100 - 102	ES 29/1
Drainage		RR 29/1/88
Building	Withheld. Design Cert. and Calcs required for beams. Ina please note engineers comments	
P. Waters 29-1-88	Conditions:- i, ii, v, vi, xvii, xx, iv, ix. xii, Provide adequate out flow ventilation.	P7 12-2-88

JENNIAN HOMES LTD

CONTRACT - GENERAL SPECIFICATIONS

Specification of the work to be done and the materials to be used in erection and completion of a residence as per accompanying drawings.

For -

Mr ~~and Mrs~~ M Cresswell & L Parker

At - 5 Willowfield Place, Hamilton

Lot Number 3 DPS 43443

This specification is to be read in conjunction with the accompanying drawings and any other drawing which may be issued during the contract.

The Contractor shall provide the Contract which is to be completed by all parties before the commencement of work on the site.

Any additions, omission or variations to the contract shall be notified in writing and signed by both parties.

The owners are to ensure that all boundary marker pegs are in place and exposed for inspection.

Contract Documents

The accompanying drawings

This specification

RECEIVED
28 JAN 1988
BLDG. DIV.